serieP TRADITION

P120E C

Modular electric deck oven

2 decks composition

serieP consists of one or more independent baking chambers and an optional prover or stand. The baking surface is made of refractory stone with coiled heating elements inside, allowing the perfect heat distribution over the whole surface. This oven is particularly suitable for direct pizza baking, on floor or on trays. Embossed stainless steel surface combined with steamer (optional) is available as an alternative to refractory stone and it is especially recomended for bakery. The baking chamber comes in two heights: 18cm or 30 cm. Temperature management is electronic, power control of ceiling and floor is independent. The oven door is hinged at the bottom, with a tempered glass window to check the product during baking. The stand consists of a painted metal structure, while the prover is a stainless steel cabinet equipped with a heating thermostat. The prover can reach the maximum temperature of 149°F, whereas the maximum temperature of the baking chamber is 842°F.

OPERATION

- Heated by armoured heating elements
- Electronic temperature management with independent adjustment of ceiling and floor
- Maximum temperature reached 842°F
- Continuous temperatures monitoring in baking chamber by thermocouple
- Vapour ducting using manual butterfly valve

CONSTRUCTION

- Structure made in folded stainless steel
- Side panels in painted sheet metal
- Hood in stainless steel
- Steam duct in stainless steel plate
- Stainless steel door, tempered glass
- Aluminated steel top and side structure
- Dual halogen lighting
- Rock wool heat insulation

ACCESSORIES

- Leavening prover on wheels height 31 1/2”
- Stand with wheels height 23 1/2”, 31 1/2”, 37 1/2”
- Steamer
- Spacer element height 11 13/16”
- Refractory brick or buckle plate surface
- Additional tray holder guides for compartment and stand
- Self-condensing hood
- Frontless hood

INTERNAL BAKING DIMENSIONS

Internal height	7”/12”
Internal depth	51”
Internal widht	49”
Baking surface	17,2ft²

STANDARD EQUIPMENT

- 20 customisable programs
- Timer
- Economiser
- Independent maximum temperature safety device

TOP VIEW

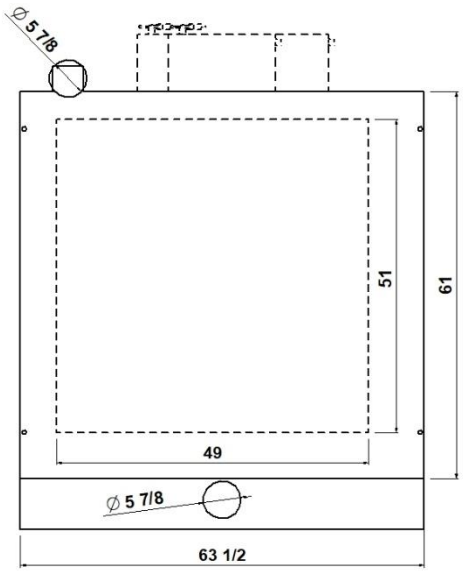

serieP TRADITION

P120E C

MORETTI FORNI The SmartBaking Company®

1 baking chamber height 7”

(assembled with stand height 37 1/2”)

REAR VIEW

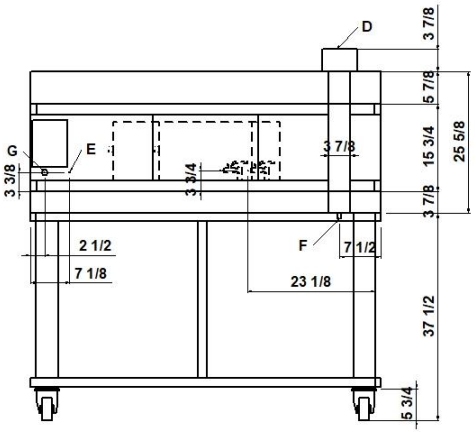

RIGHT SIDE VIEW

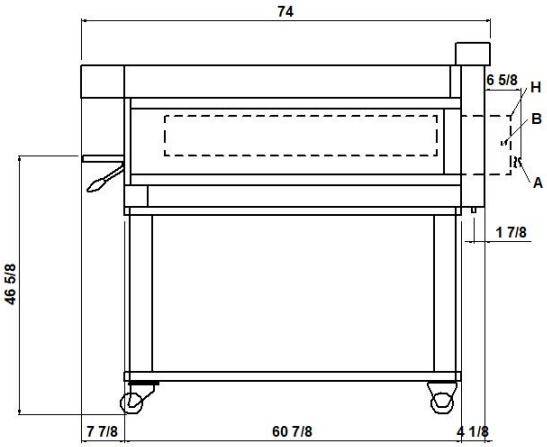

FRONT VIEW

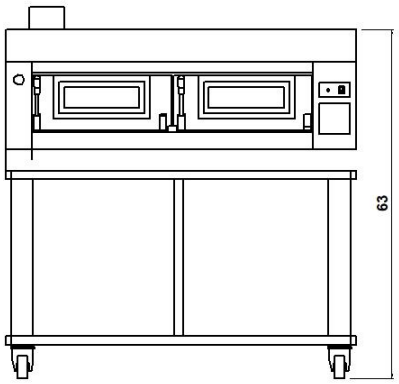

NOTE: The dimensions indicated in the views are in inches.

A	B	D	E
Ø 5/16” steamer water outlet	3/4” male steamer water inlet	Ø 5 7/8” steam exhaust	M6 equipotential screws
F	**G**	**H**	
Ø 1/2” condensate exhaust	fairleads	Steamer 3480W (see data sheet)	

DIMENSIONS

External height	25 5/8” (650mm)
External depth	61” (1547mm)
External width	63 1/2” (1610mm)
Weight	763lb (346kg)

TOTAL BAKING CAPACITY

Tray 26”x18” (600x400)mm	6
Pizza diameter 12”	16
Pizza diameter 18”	6

SHIPPING INFORMATION

Packed in wooden crate

Height	36” (900mm)
Depth	81” (2052mm)
Width	72” (1810mm)
Weight	874lb (396kg)

When combined with leavening compartment or stand:

Max height	73” (1850mm)
Max weight	1142lb (518kg)

FEEDING AND POWER

Standard feeding
A.C. V208 3ph
Feeding on request
A.C. V240 3ph

Frequency	60Hz
Max power	16,9kW/DECK
*Average power cons	8,5kWh

Ampère max
47A/DECK (V208 3ph)
40,7A/DECK (V240 3ph)
Connecting cable for each chamber
7AWG/DECK
Power supply (optional proofer)
A.C. V(208/240) 1ph 60Hz

Max power	1,8kW
*Average power cons	0,9kWh

Conn. Cable 14AWG – Ampère 7,5A

*** This value is subject to variation according to the way in which the equipment is used**

NOTE: MORETTI FORNI S.P.A. reserves the right to modify the characteristics of the products illustrated in this publication without prior notice

serieP TRADITION

P120E C

MORETTI FORNI The SmartBaking Company®

2 baking chambers height 7”

(assembled with proofer height 31 1/2”)

REAR VIEW

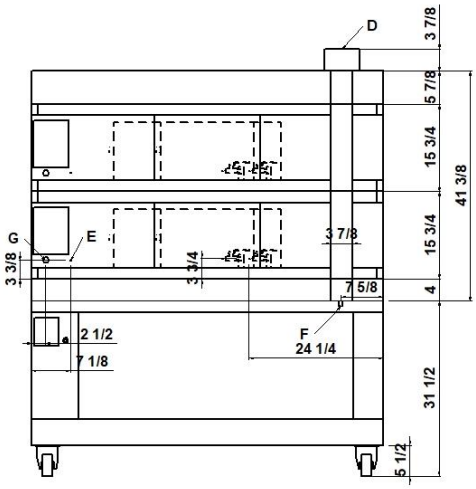

RIGHT SIDE VIEW

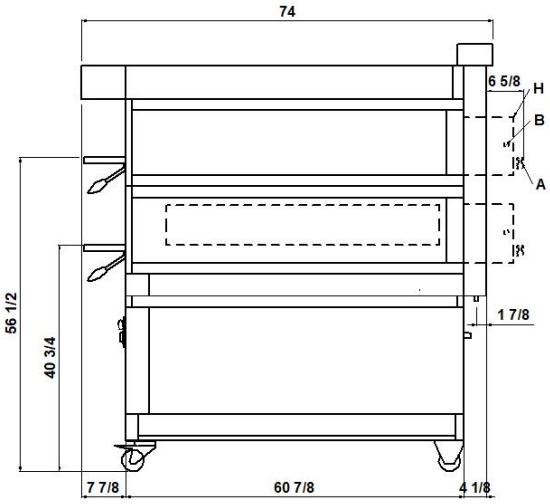

FRONT VIEW

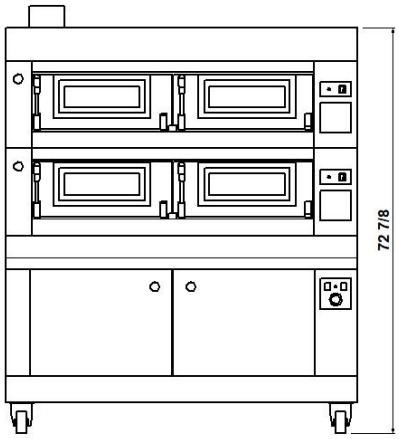

NOTE: The dimensions indicated in the views are in inches.

A	B	D	E
Ø 5/16” steamer water outlet	3/4” male steamer water inlet	Ø 5 7/8” steam exhaust	M6 equipotential screws
F	**G**	**H**	
Ø 1/2” condensate exhaust	fairleads	Steamer 3480W (see data sheet)	

DIMENSIONS

External height	41 3/8” (1050mm)
External depth	61” (1547mm)
External width	63 1/2” (1610mm)
Weight	1281lb (581kg)

TOTAL BAKING CAPACITY

Tray 26”x18” (600x400)mm	12
Pizza diameter 12”	32
Pizza diameter 18”	12

SHIPPING INFORMATION

Packed in wooden crate

Height	51 1/2” (1300mm)
Depth	81” (2052mm)
Width	72” (1810mm)
Weight	1414lb (641kg)

When combined with leavening compartment or stand:

Max height	89” (2250mm)
Max weight	1683lb (763kg)

FEEDING AND POWER

Standard feeding
A.C. V208 3ph
Feeding on request
A.C. V240 3ph

Frequency	60Hz
Max power	16,9kW/DECK
*Average power cons	8,5kWh

Ampère max
47A/DECK (V208 3ph)
40,7A/DECK (V240 3ph)
Connecting cable for each chamber
7AWG/DECK
Power supply (optional proofer)
A.C. V(208/240) 1ph 60Hz

Max power	1,8kW
*Average power cons	0,9kWh

Conn. Cable 14AWG – Ampère 7,5A

*** This value is subject to variation according to the way in which the equipment is used**

NOTE: MORETTI FORNI S.P.A. reserves the right to modify the characteristics of the products illustrated in this publication without prior notice

serieP TRADITION

P120E C

MORETTI FORNI The SmartBaking Company®

3 baking chambers height 7”

(assembled with proofer height 23 1/2”)

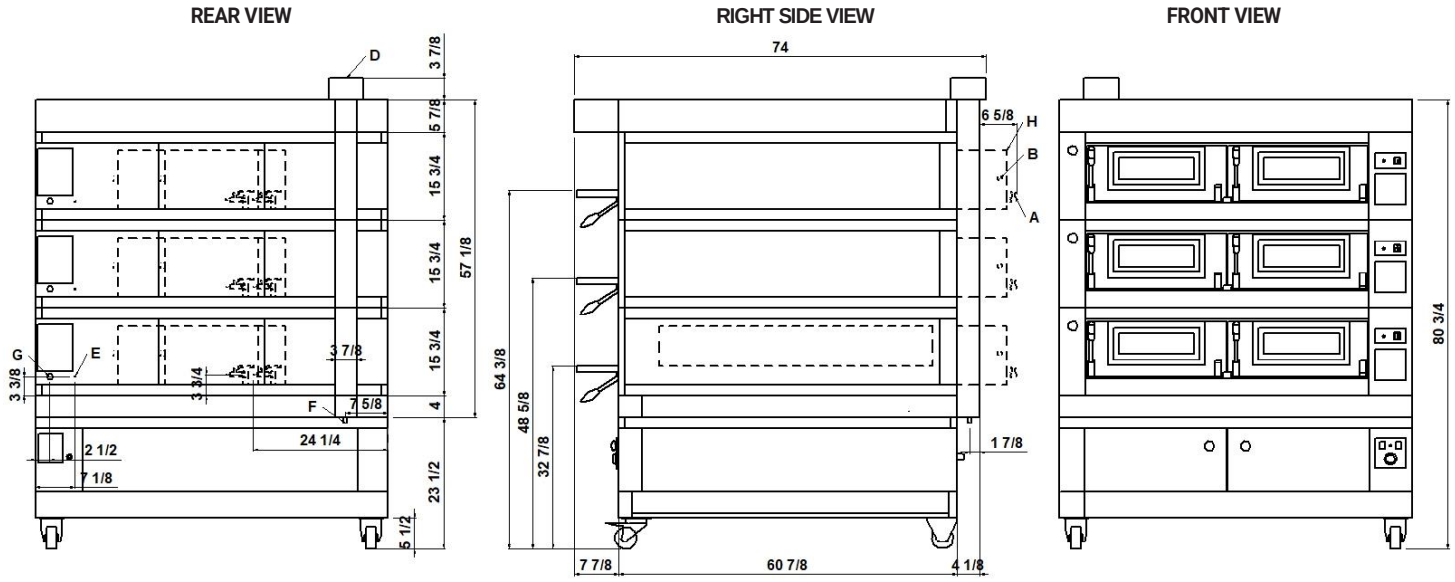

NOTE: The dimensions indicated in the views are in inches.

A	B	D	E
Ø 5/16” steamer water outlet	3/4” male steamer water inlet	Ø 5 7/8” steam exhaust	M6 equipotential screws
F	**G**	**H**	
Ø 1/2” condensate exhaust	fairleads	Steamer 3480W (see data sheet)	

DIMENSIONS

External height	57 1/8” (1450mm)
External depth	61” (1547mm)
External width	63 1/2” (1610mm)
Weight	1799lb (716kg)

TOTAL BAKING CAPACITY

Tray 26”x18” (600x400)mm	18
Pizza diameter 12”	48
Pizza diameter 18”	18

SHIPPING INFORMATION

Packed in wooden crate

Height	67” (1700mm)
Depth	81” (2052mm)
Width	72” (1810mm)
Weight	1954lb (886kg)

When combined with leavening compartment or stand:

Max height	105” (2650mm)
Max weight	2223lb (1008kg)

FEEDING AND POWER

Standard feeding
A.C. V208 3ph
Feeding on request
A.C. V240 3ph

Frequency	60Hz
Max power	16,9kW/DECK
*Average power cons	8,5kWh

Ampère max
47A/DECK (V208 3ph)
40,7A/DECK (V240 3ph)
Connecting cable for each chamber
7AWG/DECK
Power supply (optional proofer)
A.C. V(208/240) 1ph 60Hz

Max power	1,8kW
*Average power cons	0,9kWh

Conn. Cable 14AWG – Ampère 7,5A

*** This value is subject to variation according to the way in which the equipment is used**

NOTE: MORETTI FORNI S.P.A. reserves the right to modify the characteristics of the products illustrated in this publication without prior notice

serieP TRADITION | **P120E C**

MORETTI FORNI The SmartBaking Company®

2 baking chambers height 7”+12”

(assembled with proofer height 31 1/2”)

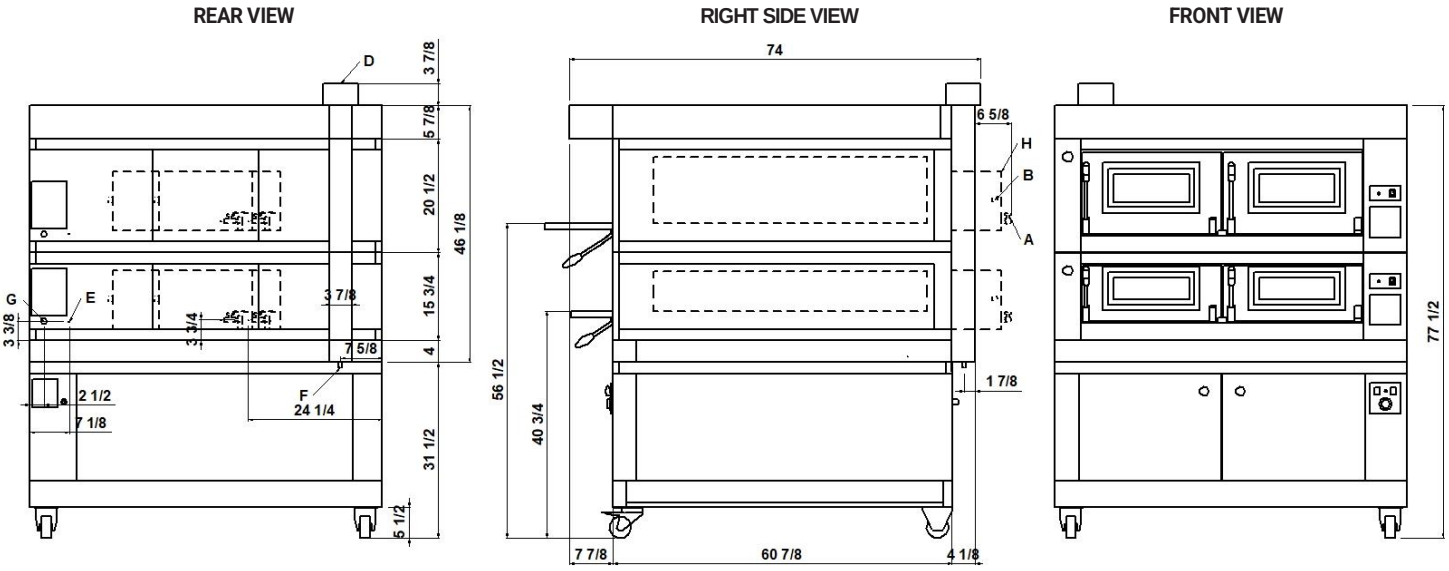

NOTE: The dimensions indicated in the views are in inches.

A	B	D	E
Ø 5/16” steamer water outlet	3/4” male steamer water inlet	Ø 5 7/8” steam exhaust	M6 equipotential screws
F	**G**	**H**	
Ø 1/2” condensate exhaust	fairleads	Steamer 3480W (see data sheet)	

DIMENSIONS

External height	46” (1170mm)
External depth	61” (1547mm)
External width	63 1/2” (1610mm)
Weight	1380lb (625kg)

TOTAL BAKING CAPACITY

Tray 26”x18” (600x400)mm	12
Pizza diameter 12”	32
Pizza diameter 18”	12

SHIPPING INFORMATION

Packed in wooden crate

Height	56” (1420mm)
Depth	81” (2052mm)
Width	72” (1810mm)
Weight	1510lb (685kg)

When combined with leavening compartment or stand:

Max height	94” (2370mm)
Max weight	1775lb (805kg)

FEEDING AND POWER

Standard feeding
A.C. V208 3ph
Feeding on request
A.C. V240 3ph

Frequency	60Hz
Max power	16,9kW/DECK
*Average power cons	8,5kWh

Ampère max
47A/DECK (V208 3ph)
40,7A/DECK (V240 3ph)
Connecting cable for each chamber
7AWG/DECK
Power supply (optional proofer)
A.C. V(208/240) 1ph 60Hz

Max power	1,8kW
*Average power cons	0,9kWh

Conn. Cable 14AWG – Ampère 7,5A

*** This value is subject to variation according to the way in which the equipment is used**

NOTE: MORETTI FORNI S.P.A. reserves the right to modify the characteristics of the products illustrated in this publication without prior notice

serieP TRADITION | **P120E C**

MORETTI FORNI The SmartBaking Company®

3 baking chambers height 7”+7”+12”

(assembled with proofer height 23 1/2”)

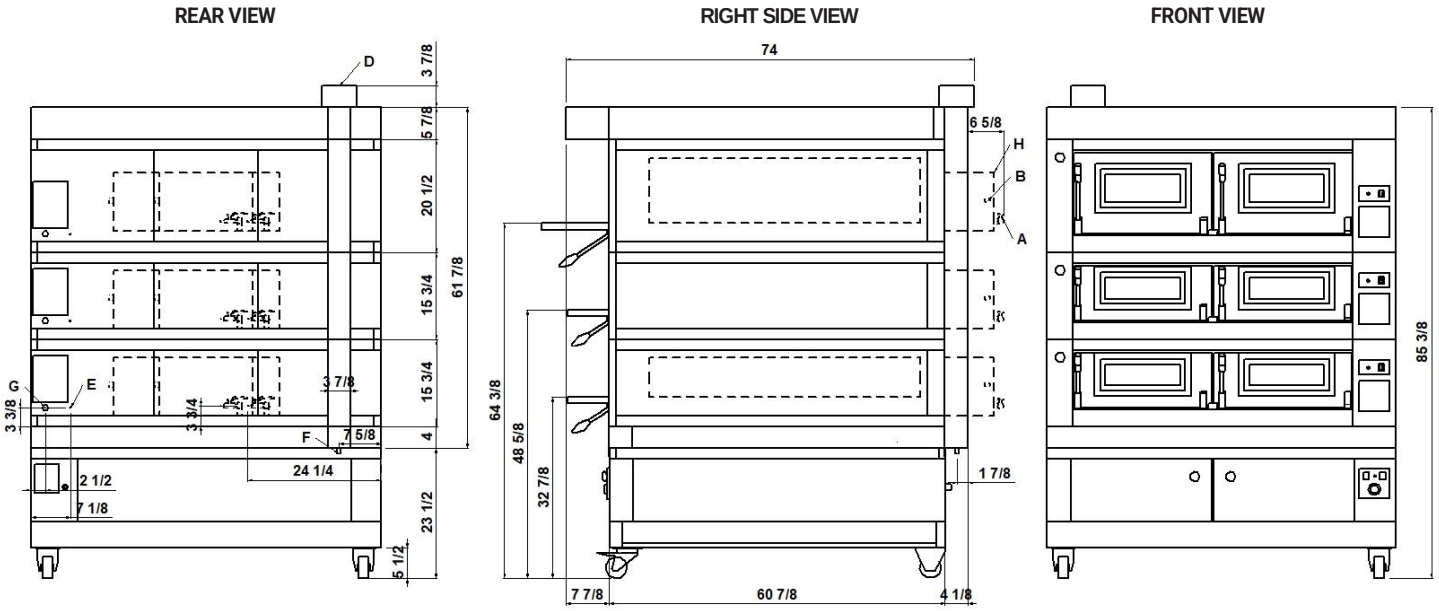

NOTE: The dimensions indicated in the views are in inches.

A	B	D	E
Ø 5/16” steamer water outlet	3/4” male steamer water inlet	Ø 5 7/8” steam exhaust	M6 equipotential screws
F	**G**	**H**	
Ø 1/2” condensate exhaust	fairleads	Steamer 3480W (see data sheet)	

DIMENSIONS

External height	61 7/8” (1570mm)
External depth	61” (1547mm)
External width	63 1/2” (1610mm)
Weight	1895lb (860kg)

TOTAL BAKING CAPACITY

Tray 26”x18” (600x400)mm	18
Pizza diameter 12”	48
Pizza diameter 18”	18

SHIPPING INFORMATION

Packed in wooden crate

Height	72” (1820mm)
Depth	81” (2052mm)
Width	72” (1810mm)
Weight	2050lb (930kg)

When combined with leavening compartment or stand:

Max height	109” (2770mm)
Max weight	2315lb (1050kg)

FEEDING AND POWER

Standard feeding
A.C. V208 3ph
Feeding on request
A.C. V240 3ph

Frequency	60Hz
Max power	16,9kW/DECK
*Average power cons	8,5kWh

Ampère max
47A/DECK (V208 3ph)
40,7A/DECK (V240 3ph)
Connecting cable for each chamber
7AWG/DECK
Power supply (optional proofer)
A.C. V(208/240) 1ph 60Hz

Max power	1,8kW
*Average power cons	0,9kWh

Conn. Cable 14AWG – Ampère 7,5A

*** This value is subject to variation according to the way in which the equipment is used**

NOTE: MORETTI FORNI S.P.A. reserves the right to modify the characteristics of the products illustrated in this publication without prior notice

P120 C

TECHNICAL DATA

SHIPPING INFORMATION H18		P120C_1_18	P120C_2_18	P120C_3_18
Packed in wooden crate	Height	36” (900mm)	51 1/2” (1300mm)	67” (1700mm)
	Weight	874lb (396kg)	1414lb (641kg)	1954lb (886kg)
When combined with proofer or stand	Max. height	73” (1850mm)	89” (2250mm)	105” (2650mm)
	Max. weight	1142lb (518kg)	1683lb (763kg)	2223lb (1008kg)
SHIPPING INFORMATION H30		**P120C_1_30**	**P120C_2_30**	**P120C_3_30**
Packed in wooden crate	Height	41” (1020mm)	61” (1540mm)	82” (2060mm)
	Weight	917lb (416kg)	1501lb (681kg)	2086lb (946kg)
When combined with proofer or stand	Max. height	78” (1970mm)	93” (2340mm)	113” (2860mm)
	Max. weight	1186lb (538kg)	1770lb (803kg)	2377lb (1078kg)

FEEDING AND POWER (EACH DECK NEEDS TO BE CONNECTED INDEPENDENTLY AND THE LOAD SHOWN BELOW ARE PER DECK)	A.C. V208 3ph 60Hz	Standard feeding	Max power	kW	16,9
			*Medium cons/hour	kWh	8,5
			Ampère Max	A/DECK	47
			Connecting cable	AWG/DECK	7
	A.C. V240 3ph 60Hz	Feeding on request	Max power	kW	16,9
			*Medium cons/hour	kWh	8,5
			Ampère Max	A/DECK	40,7
			Connecting cable	AWG/DECK	7
	A.C. V208 3ph 60Hz pastry heating elements	Standard feeding	Max power	kW	12,5
			*Medium cons/hour	kWh	6,3
			Ampère Max	A/DECK	34,7
			Connecting cable	AWG/DECK	7
	A.C. V240 3ph 60Hz pastry heating elements	Feeding on request	Max power	kW	12,5
			*Medium cons/hour	kWh	6,3
			Ampère Max	A/DECK	30,1
			Connecting cable	AWG/DECK	7
	A.C. V(208/240) 1ph 60Hz	Proofer	Max power	kW	1,8
			*Medium cons/hour	kWh	0,9
			Ampère Max	A/DECK	7,5
			Connecting cable	AWG/DECK	14

*** This value is subject to variation according to the way in which the equipment is used**

NOTE: MORETTI FORNI S.P.A. reserves the right to modify the characteristics of the products illustrated in this publication without prior notice